TDL201

2000kg 3-Wheel Dual-drive Counterbalance Forklift

LI-ION TECHNOLOGY

Let's grow together

- Premium 3 wheels truck designed around 48V Li-Ion battery
- Powerful dual drive AC traction motors
- Innovative design for higher operator comfort
- Great ergonomic design with adjustable steering wheel and comfortable bucket seat
- High-resolution LCD display installed at the upper right corner of the cabin
- Single phase integrated charger with 16A plug

CE

Manufacturer			EP
Model designation			TDL201
Drive			Electric
Load capacity	Q	kg	2000
Load center distance	c	mm	500
Service weight		kg	3575
Retracted mast height	h1	mm	2075
Lift height	h3	mm	3000
Height, mast extended	h4	mm	4058
Length to face of forks	l2	mm	2025
Overall width	b1/b2	mm	1150
Fork dimensions	s/e/l	mm	40/122/1070
Turning radius	Wa	mm	1605
Travel speed, laden/unladen		km/h	15/16
Lifting speed, laden/unladen		m/s	0.35/0.43
Lowering speed, laden/unladen		m/s	0.45/0.37
Max. gradeability, laden/unladen		%	15/17
Drive motor rating S2 60 min		kW	5.4*2
Battery voltage/nominal capacity		V/Ah	48/405

EP EQUIPMENT CO.,LTD
www.ep-equipment.com

V2303.02

FEATURE

Hydraulic steering system with better human-vehicle interaction

TDL201 adopts the hydraulic steering system and this achieves more precise and responsive operation, which demonstrates better human-vehicle interaction. Plus, the hydraulic steering system comes with a simple and reliable structure with lower maintenance costs.

Electromagnetic joystick available for premium needs

For premium material handling, the electromagnetic joystick is available as an option which puts operation experience and productivity at the forefront. The joystick houses all controls of the truck and the operator are allowed to perform all functions in a palm-sized place with utmost precision.

-

Larger legroom to amplify driving comfort

The integrated design of the operator compartment is intended to create a larger operational space to improve ergonomics to reduce operator work-related health issues, as well as to improve operational efficiency.

Powerful and constant working performance

The 48V/405Ah lithium battery with opportunity charging and 5.4kW*2 dual drive motors guarantee the TDL201 operate at full power at all times with a permanently high performance. It comes with a 48V/50A integrated charger as standard for charging convenience and 48V/150A and 48V/200A external chargers available as options to better fit in your needs.

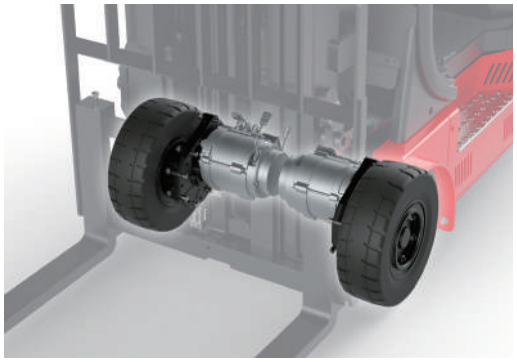

Optimized truck frame for cabin installation and detachment

TDL201 features the streamlined design as the L2 series and an optimized one-piece truck frame, which is easy for cabin installation as well as detachment.

New informative LCD display

TDL201 provides the high-resolution LCD display which is installed at the upper right corner of the cabin. Via a glance, the operator is able to find speed, working hours, battery status ,miles driven and parking status. This informative and intuitive display ensures relaxed and safe working.

Li-ion Counterbalance Forklift Truck 2.0T

TDL201

Distinguishing mark	1.1	Manufacturer			EP
	1.2	Model designation			TDL201
	1.3	Drive			Electric
	1.4	Operator type			Seated
	1.5	Load capacity	Q	kg	2000
	1.6	Load center distance	c	mm	500
	1.8	Load distance，centre of drive axle to fork	x	mm	420
	1.9	Wheelbase	y	mm	1358
Service weight	2.1	Service weight		kg	3575
	2.2	Axle loading, laden front/rear		kg	4892/683
	2.3	Axle loading, unladen front/rear		kg	1535/2040
Tyres/chassis	3.1	Tyre type			Solidrubber
	3.2	Tyre size, front			200/50-10
	3.3	Tyre size, rear			15/4.5-8
	3.5	Wheels, number front/rear (x=drive wheels)		mm	2X/2
	3.6	Tread width, front	b_{10}	mm	936
	3.7	Tread width, rear	b_{11}	mm	175
Dimensions	4.1	Tilt of mast/fork carriage forward/backward	α/β	°	5/6
	4.2	Retracted mast height	h_1	mm	2075
	4.3	Free lift	h_2	mm	100
	4.4	Lift height	h_3	mm	3000
	4.5	Height, mast extended	h_4	mm	4058
	4.7	Height of overhead guard (cabin)	h_6	mm	2140
	4.8	Seat height/standing height	h_7	mm	1070
	4.12	Tow coupling height	h_{10}	mm	560
	4.19	Overall length	l_1	mm	3095
	4.20	Length to face of forks	l_2	mm	2025
	4.21	Overall width	b_1/b_2	mm	1150
	4.22	Fork dimensions	s×e×l	mm	40X122X1070
	4.23	A,B Fork carriage class/type A, B			2A
	4.24	Fork carriage width	b_3	mm	1040
	4.31	Ground clearance, laden, below mast	m_1	mm	86
	4.32	Ground clearance, center of wheelbase	m_2	mm	104
	4.34.1	Aisle width for pallets 1000×1200 crossways	Ast	mm	3348
	4.34.2	Aisle width for pallets 800×1200 lengthways	Ast	mm	3485
	4.35	Turning radius	Wa	mm	1605
Performance data	5.1	Travel speed, laden/unladen		km/h	15/16
	5.2	Lifting speed, laden/unladen		m/s	0.35/0.43
	5.3	Lowering speed, laden/unladen		m/s	0.45/0.37
	5.5	Drawbar pull, laden/unladen		N	——
	5.6	Max. drawbar pull, laden/unladen		N	——
	5.8	Max. gradeability, laden/unladen		%	15/17
	5.10	Service brake			Electromagnetic
	5.11	Parking brake			Electromagnetic
Electric-engine	6.1	Drive motor rating S2 60 min		kW	5.4X2
	6.2	Lift motor rating at S3 15%		kW	11
	6.4	Battery voltage/nominal capacity		V/Ah	48V/405Ah
	6.5	Battery weight		kg	207
	6.6	Energy consumption according to DIN EN 16796		kWh/h	5.288 [1)]
	6.7	Turnover output according to VDI 2198		t/h	120
	6.8	Turnover efficiency according to VDI 2198		t/kWh	22.69
Addition data	8.1	Type of drive control			AC
	10.5	Steering design			Hydraulic
	10.7	Sound pressure level at the driver's ear		dB(A)	79
	15.1	Charger output current		A	50

If there are improvements of technical parameters or configurations, no further notice will be given.
The diagram shown may contain non-standard configurations.

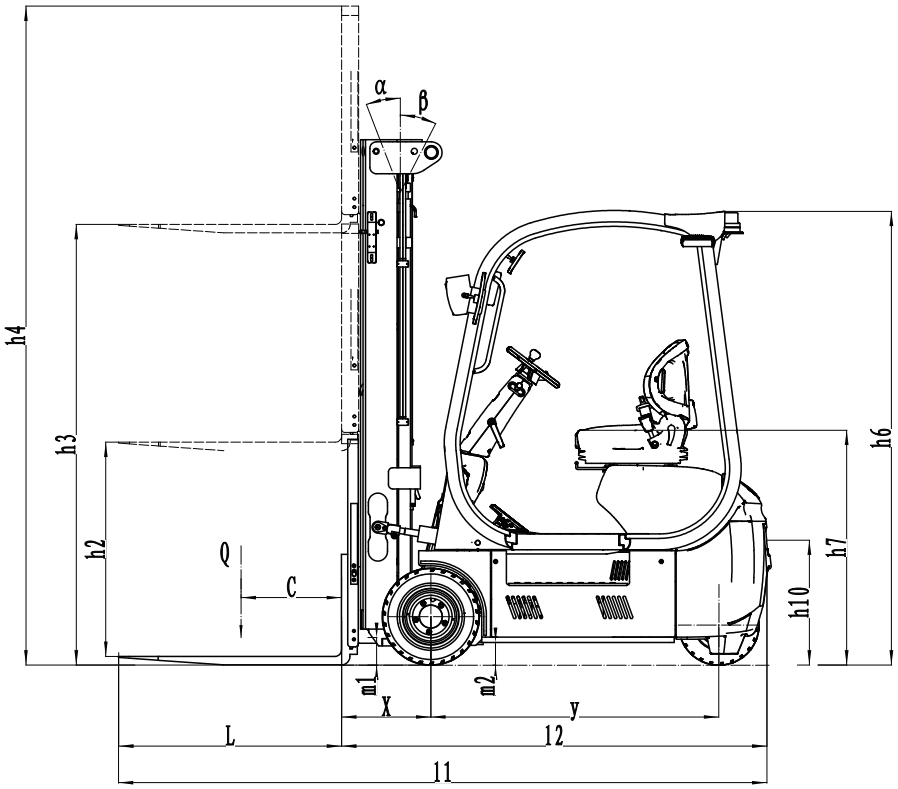

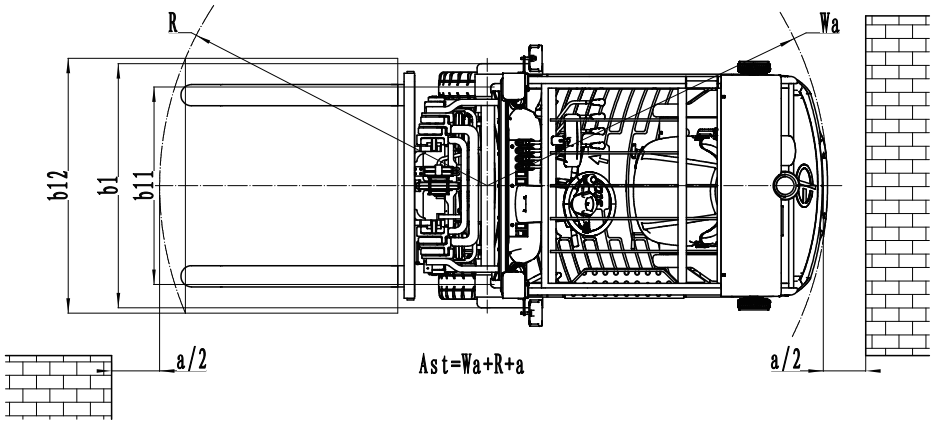

Mast Option

Mast types	Lift height (h3)	Height, Mast			Height,Free lift(h2)	
		Height, mast lowered(h1)	Height, mast extended(h4)		No shelving	With shelving
			No shelving	With shelving		
	mm	mm	mm	mm	mm	mm
2-Standard Mast	3000	2075	3740	4055	100	100
	3600	2375	4340	4655	100	100
	4000	2455	4740	5055	100	100
3-Free Mast	4500	2140	5240	5555	1430	1115
	4800	2240	5540	5855	1530	1215
	5000	2305	5740	6055	1595	1280
	5500	2475	6240	6555	1765	1450
	6000	2690	6740	7055	1980	1665

RATED CAPACITIES AND LOAD CENTERES GRAPH

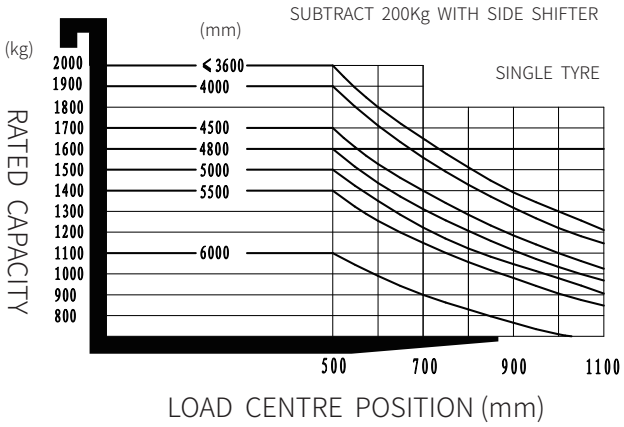

Option

No.	Optional items	TDL201
1.1	Fork dimension	●122*40*1070○122*40*920○122*40*1150○122*40*1220 ○122*40*1370○122*40*1500○122*40*1600○122*40*1700 ○122*40*1820○122*40*1900○122*40*2000○122*40*2200
1.4	Fork carriage width	●1040mm ○Yes and can be customized
1.5	Fork carriage height	●1067mm（42in）○1220mm（48in） ○1520mm（60in）○Yes and can be customized
2.5	Front wheel material	●Solid○Non-marking solid
2.6	Rear wheel material	●Solid○Non-marking solid
2.7	Battery capacity	●405Ah
2.8	Charger	●48V-50A internal ○48V-150A external ○48V-200A external
2.9	Battery indicator	●With time
2.10	Seat type	○Regular ●Premium ●Premium + seatbelt logic switch(CE) ○Suspension ○Suspension + seatbelt logic switch
2.11	Attachments	●No○Built-in sideshifter○External shifter○Fork positioner
2.13	Traction pin	●Yes
2.14	Electrostatic chain	●Yes
3.5	Front lamp	●LED
3.6	Rear lamp	●No○LED
3.7	Warning lamp	●Yes
3.8	Steering lamp	●LED
3.9	Blue lamp	●No○2 front○1 reat○2 front + 1 rear
3.10	Area warning lamp	●No○Red, add 1 on both sides
3.11	Rearview mirror	●1 rearview mirror○2 rearview mirrors
3.12	Hummer	●Yes
3.17	OPS system	●Yes
3.19	USB interface	●No○Yes and not customized
3.22	Electronic sale with print	●No○Yes and not customized
3.23	Telematics	●No○Yes and not customized
4.3	Cabin	●No○Yes and not customized
4.5	Proportional lift system	●No○Yes and not customized
4.9	Heater	●No○Yes and not customized
Note: ● standard ○ option — NA		